Surface-mounted luminaire MACH LED - MTAL 1 S

112567000-00570117

Waldmann
ENGINEER OF LIGHT.

60,00 €

fitted with	1 x Light-emitting diode light colour neutral white
work equipment	without
connected load	24 V; DC
power consumption	approx. 6 W
luminous flux	approx. 300 lm
luminous efficacy	approx. 50 lm/W
light distribution	direct
color rendering index (CRI)	> 80 (typ.85)
system of protection	IP 67
class of protection	III
technology	switchable
usage	external
luminaire body	aluminium, anodised,
lamp cover	screen, milky
weight (net)	approx. 0.3 kg
mains supply	built-in plug US~ConnectionStandard
fastening	lamp bracket (accessory), pipe clamp (accessory)
dimension	A=182mm
special features	angle of radiation 50°

RSFM 4/0.5M

illuminance

Comment: d=50cm

Em: 214 lx
Emax: 580 lx
Emin: 40 lx

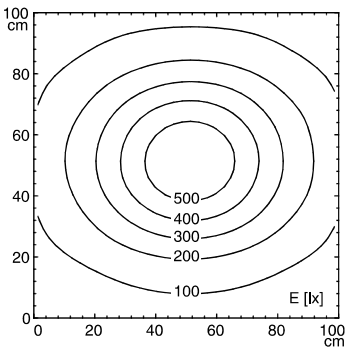

luminous intensity

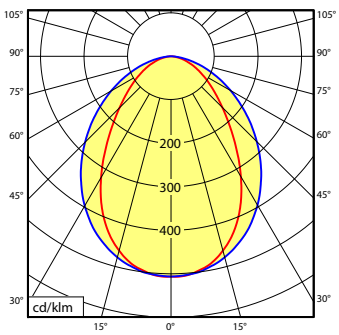

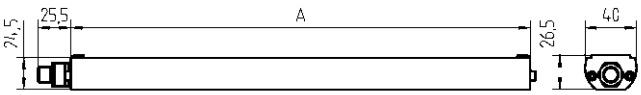

© 07.2018 H. Waldmann GmbH & Co. KG

apparecchio d'illuminazione LED per macchine

MACH LED - MTAL 1 S 112567005-00072354

Waldmann
ENGINEER OF LIGHT.

95,00 €

equipaggiamento	1 x diodo ad emissione luminosa tonalità della luce tono neutro, 5000 K, Indice di resa cromatica (IRC)=65 Classe di efficienza energetica A+
alimentatore	senza
tensione di alimentazione	24 V; 50/60 Hz
potenza assorbita	circa 6 W
antiabbagliamento	senza
tipo di protezione	IP 67
classe di protezione	III
tecnica	commutabile
comando	no
corpo dell'apparecchio	alluminio, anodizzato, alluminio anodizzato
copertura lampade	schermo, trasparente
peso (netto)	circa 0.3 kg
cavo d'alimentazione	circa 0.3 m; senza spina
fissaggio	staffe di fissaggio (accessorio), staffa a clip (accessorio)
lunghezza totale	182
particolaritá	angolo di emissione 50°

intensità luminose

condizioni di misurazione: d=50cm

Em: 297 lx
Emax: 782 lx
Emin: 34 lx

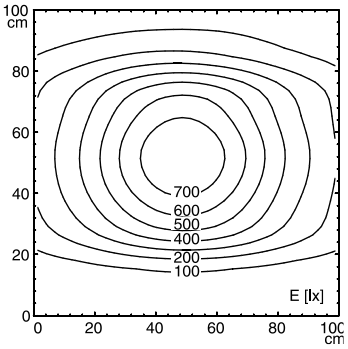

distrib. intensità luminosa

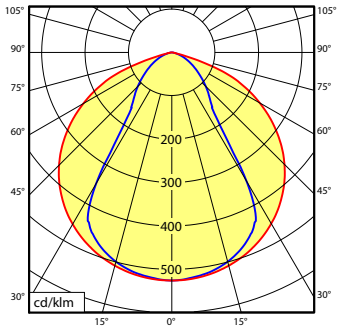

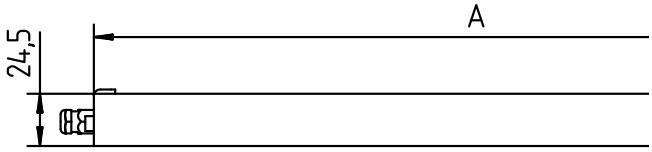

Con riserva di modifiche tecniche

I valori illuminotecnici ed elettronici possono variare a causa delle tolleranze nei componenti.

www.waldmann.com

© 01.2015 H. Waldmann GmbH & Co. KG

LED machine luminaire

MACH LED - MTAL 2 S 112567010-00072363

Waldmann
ENGINEER OF LIGHT.

60,00 €

fitted with	2 x Light-emitting diode light colour neutral white, 5000 K, Color Rendering Index (CRI)=65
work equipment	without
connected load	24 V; DC
power consumption	approx. 12 W
glare-free	without
system of protection	IP 67
class of protection	III
technology	switchable
usage	without switch
luminaire body	
material	aluminium
surface	anodised
colour	aluminium coloured anodised
lamp cover	screen, clear
weight (net)	approx. 0.5 kg
mains lead	approx. 3.0 m; with free stranded wires
fastening	lamp bracket (accessory), pipe clamp (accessory)
total length	357 mm
special features	beam angle 30°

illuminance

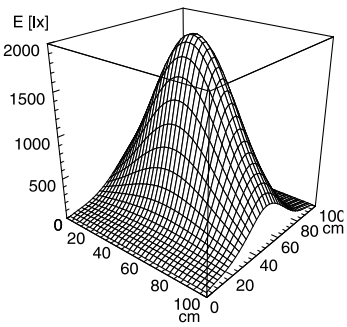

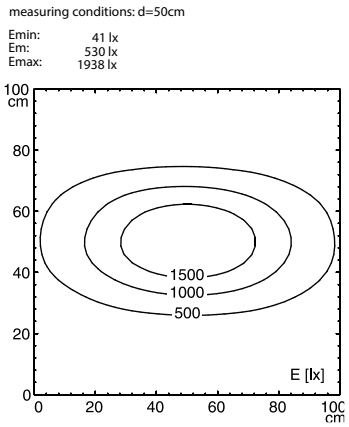

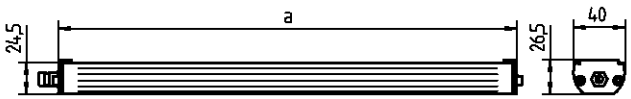

Errors and technical changes excepted. Images can vary from original.

In reference to luminous flux and colour temperature LED module and illumination unit can differ (Binning).

© 12.2011 H. Waldmann GmbH & Co. KG

LED machine luminaire

MACH LED - MTAL 2 S 112567015-00072377

Waldmann
ENGINEER OF LIGHT.

140,25 €

fitted with	2 x Light-emitting diode light colour neutral white, 5000 K, Color Rendering Index (CRI)=65
work equipment	without
connected load	24 V; 50/60 Hz
power consumption	approx. 12 W
glare-free	without
system of protection	IP 67
class of protection	III
technology	switchable
usage	without switch
luminaire body	
material	aluminium
surface	anodised
colour	aluminium coloured anodised
lamp cover	screen, clear
weight (net)	approx. 0.5 kg
mains lead	approx. 3.0 m; with free stranded wires
fastening	lamp bracket (accessory), pipe clamp (accessory)
total length	357 mm
special features	angle of radiation 50°

illuminance

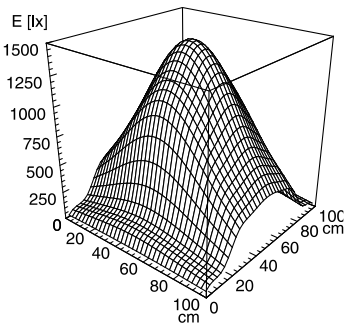

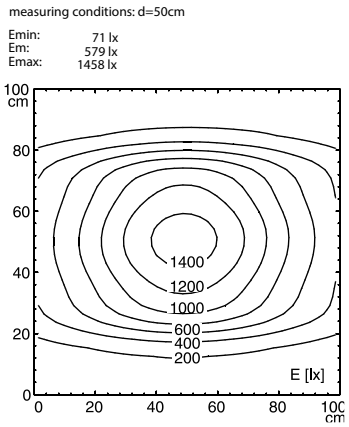

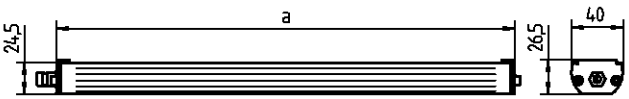

Errors and technical changes excepted. Images can vary from original.

In reference to luminous flux and colour temperature LED module and illumination unit can differ (Binning).

© 12.2011 H. Waldmann GmbH & Co. KG

LED machine luminaire

MACH LED - MTAL 4 S

160,00 €

FITTED WITH	4 x Light-emitting diode 6 W
WORK EQUIPMENT	without
CONNECTED LOAD	24 V, DC
POWER CONSUMPTION	approx. 20 W
SYSTEM OF PROTECTION	IP 67
CLASS OF PROTECTION	III
TECHNOLOGY	switchable
USAGE	without switch
LUMINAIRE BODY	
MATERIAL	aluminium
SURFACE	anodised
COLOUR LUMINAIRE BODY	aluminium coloured anodised
LAMP COVER	screen, clear
WEIGHT (NET)	approx. 0.9 kg
MAINS LEAD	approx. 3.0 m, with free stranded wires
FASTENING	screws
TOTAL LENGTH	741 mm
GLARE-FREE	without
SPECIAL FEATURES	angle of radiation 50°, integrated fastening clip
ARTICLE NO.	112567036-00072495

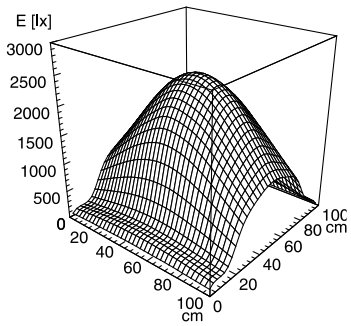

Emin: 147 lx
Em: 1077 lx
Emax: 2419 lx

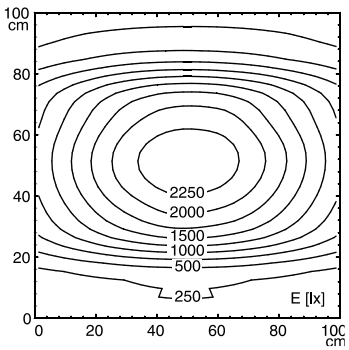

measuring conditions: d=50cm, BIN=N1

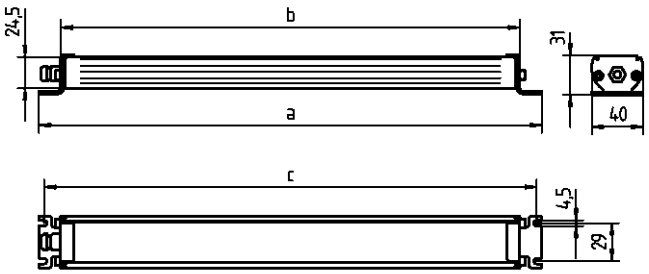

Errors and technical changes excepted. Images can vary from original.
© 07.2011 H. Waldmann GmbH & Co. KG

LED machine luminaire

MACH LED PRO - MUEL 2 S

60,00 €

FITTED WITH	2 x Light-emitting diode 6 W
WORK EQUIPMENT	without
CONNECTED LOAD	24 V, DC
POWER CONSUMPTION	approx. 10 W
SYSTEM OF PROTECTION	IP 67
CLASS OF PROTECTION	III
TECHNOLOGY	switchable
USAGE	without switch
LUMINAIRE BODY	
MATERIAL	aluminium
SURFACE	anodised
LAMP COVER	screen, clear
WEIGHT (NET)	approx. 0.7 kg
MAINS LEAD	approx. 3.0 m, with free stranded wires
DESIGN	integrated version
FASTENING	screws
TOTAL LENGTH	395 mm
GLARE-FREE	without
SPECIAL FEATURES	beam angle 30°, integrated version
ARTICLE NO.	112571004-00085220

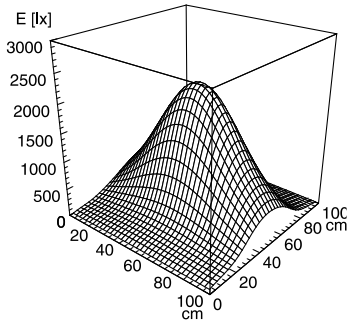

Emin: 58 lx
Em: 612 lx
Emax: 2186 lx

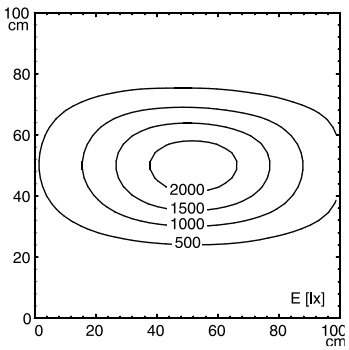

measuring conditions: d=50cm

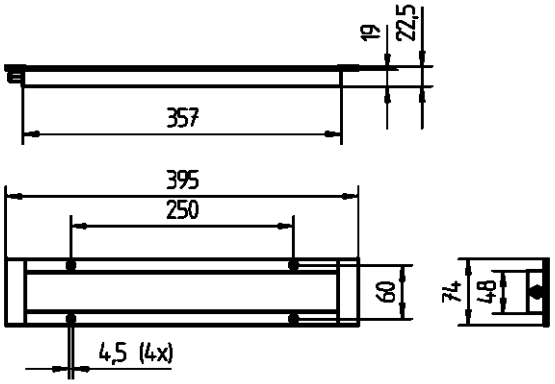

© 07.2011 H. Waldmann GmbH & Co. KG

Integrated machine luminaire

MACH LED PRO - MUEL 2 S 112571005-00085225

Waldmann
ENGINEER OF LIGHT.

88,00 €

fitted with	2 x Light-emitting diode light colour neutral white
work equipment	without
connected load	24 V; 50/60 Hz
power consumption	approx. 12 W
luminous flux	approx. 820 lm
luminous efficacy	approx. 68 lm/W
light distribution	direct
system of protection	IP 67
class of protection	III
technology	switchable
usage	external
luminaire body	aluminium, anodised,
lamp cover	screen, clear
weight (net)	approx. 0.7 kg
mains lead	approx. 3.0 m; with free stranded wires
design	integrated version
fastening	screws
special features	beam angle 30°, integrated version

Intertek

illuminance

Comment: d=50cm

Em: 612 lx
Emax: 2186 lx
Emin: 58 lx

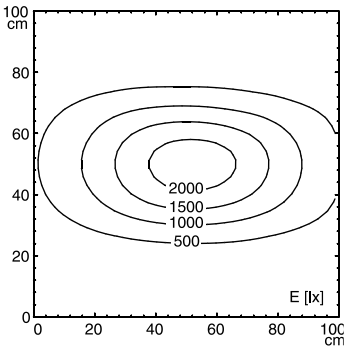

luminous intensity

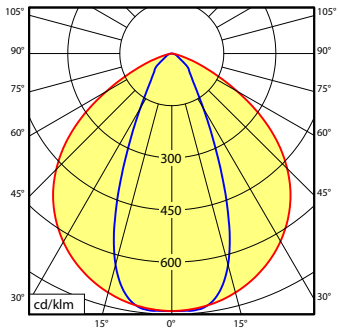

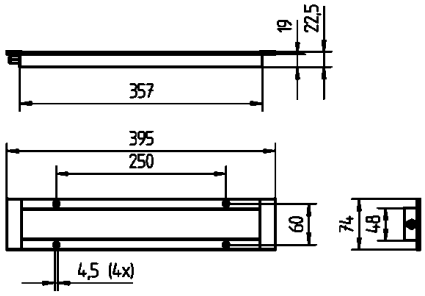

Product specifications are for reference only and are subject to change without notice. Images may vary from actual product.
Photometric and electrical data may vary due to component tolerances.

www.waldmann.com
© 01.2016 H. Waldmann GmbH & Co. KG

LED machine luminaire

MACH LED PRO - MUAL 2 S

150,00 €

FITTED WITH	2 x Light-emitting diode 6 W
WORK EQUIPMENT	without
CONNECTED LOAD	24 V, DC
POWER CONSUMPTION	approx. 10 W
SYSTEM OF PROTECTION	IP 67
CLASS OF PROTECTION	III
TECHNOLOGY	switchable
USAGE	without switch
LUMINAIRE BODY	
MATERIAL	aluminium
SURFACE	anodised
LAMP COVER	screen, clear
WEIGHT (NET)	approx. 0.7 kg
MAINS LEAD	approx. 3.0 m, with free stranded wires
DESIGN	mounted version
FASTENING	screws
TOTAL LENGTH	395 mm
GLARE-FREE	without
SPECIAL FEATURES	mounted version
ARTICLE NO.	112571026-00082511

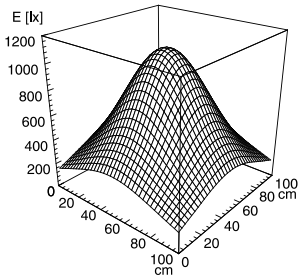

Emin: 181 lx
Em: 527 lx
Emax: 1065 lx

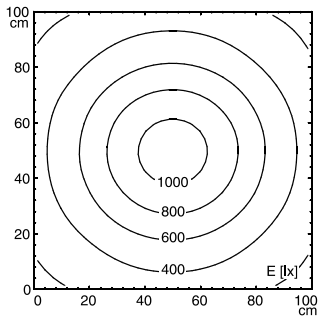

measuring conditions: d=50cm

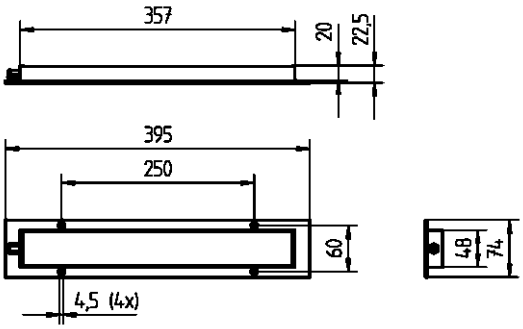

© 07.2011 H. Waldmann GmbH & Co. KG

LED machine luminaire

LUMATRIS - MSAL 24 S 113094000-00596722

Waldmann
ENGINEER OF LIGHT.

145,00 €

fitted with	24 x LED daylight white, 5600-6000 K Color Rendering Index (CRI)=80
work equipment	without
connected load	22-26 V; DC
power consumption	approx. 8W
system of protection	IP 68 - 1m/ IPX9K; DIN 40050-9
class of protection	III
technology	switchable
usage	without switch
luminaire body	
material	anodized aluminum
lamp cover	glass screen
weight (net)	approx. 3.3 lbs. [1.5 kg]
mains supply	built-in M12 plug
design	mounted version
fastening	mounting rail, tap hole 2xM6
dimension	A= 9.7" [246mm]
special features	light forming, connection on the side

M12

illuminance

measuring conditions: d=100cm

Em: 163 lx
Emax: 220 lx
Emin: 100 lx

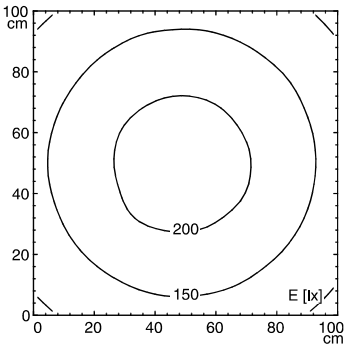

luminous intensity

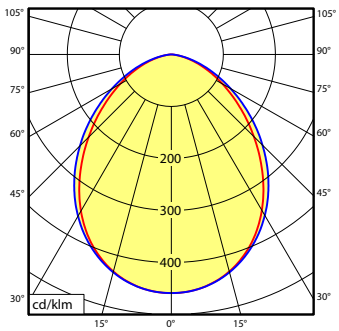

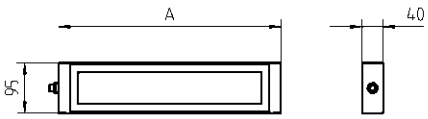

Errors and technical changes excepted. Images can vary from original.

Photometric and electrical data may vary due to component tolerances.

www.waldmann lighting .com

© 01.2014 H. Waldmann GmbH & Co. KG

Machine Tube Luminaire

RL70CV- 136 H 611063011-00073818

Waldmann
ENGINEER OF LIGHT.

fitted with	1 x compact fluorescent lamp TC-LEL 36W/840 2G11 light colour neutral white, 4000 K, Color Rendering Index (CRI)=80
	Energy efficiency category A
work equipment	conventional ballast
	Energy efficiency index (EEI): B2
connected load	230 V/ 50 Hz
light distribution	direct
glare-free	aluminiumised parabolic louvre
system of protection	IP 67
class of protection	I
luminaire body	
material	borosilicate glass
weight (net)	approx. 2.6 kg
mains lead	direct power supply
fastening	lamp bracket (accessory)
total length	580 mm
light output	394 mm
outside diameter	70 mm

130,00 €

illuminance

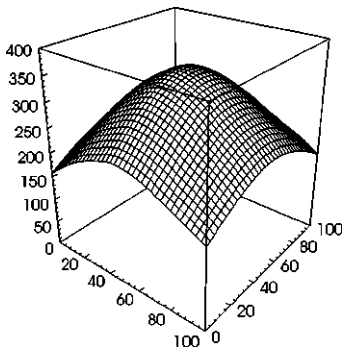

measuring conditions: d=100cm

Emin: 157 lx
Em: 256 lx
Emax: 350 lx

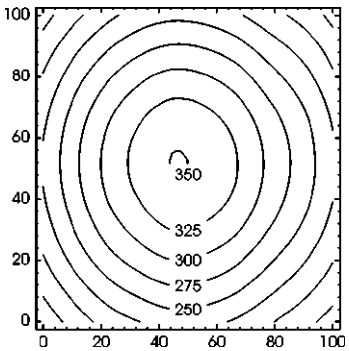

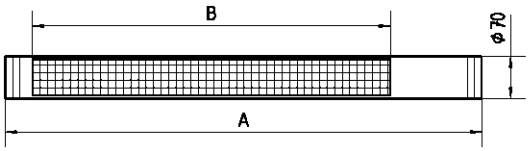

Errors and technical changes excepted. Images can vary from original.

© 12.2011 H. Waldmann GmbH & Co. KG

Hand Luminaire

HLC 109 101641000-00012363

Waldmann
ENGINEER OF LIGHT.

50,00 €

fitted with	1 x compact fluorescent lamp TC-S 9W/840 G23 light colour neutral white, 4000 K, Color Rendering Ir (CRI)=82
	Energy efficiency category A
work equipment	conventional plug-in ballast
connected load	230 V/ 50 Hz
power consumption	approx. 12 W
system of protection	IP 20
class of protection	II
usage	without switch
luminaire body	
material	cellulose acetate butyrate (CAB)
weight (net)	approx. 0.9 kg
mains lead	approx. 5.0 m; mains plug CEE 7/XVII
fastening	gambrel stick, lamp bracket (accessory), magnetic lu bracket (accessory)

CEE 7/XVII

illuminance

measuring conditions: d=50cm

Emin: 36 lx
Em: 233 lx
Emax: 953 lx

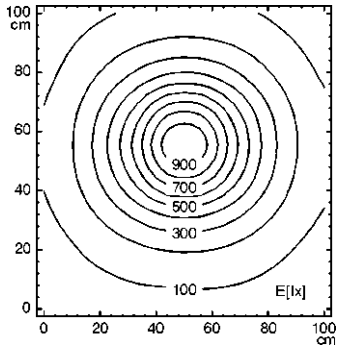

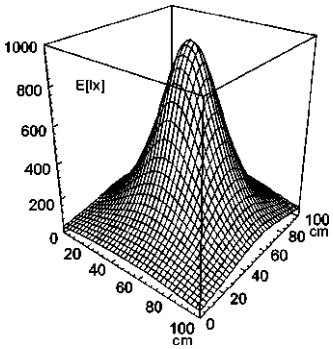

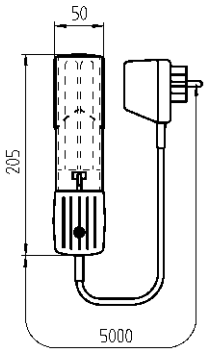

Errors and technical changes excepted. Images can vary from original.

www.waldmann.com

© 04.2013 H. Waldmann GmbH & Co. KG

Machine Tube Luminaire

RL70E- 254 112180001-00086300

Waldmann
ENGINEER OF LIGHT.

160,00 €

fitted with	2 x regular fluorescent lamp T16 54W/840 G5 light colour neutral white, 4000 K, Color Rendering Index (CRI)=80 Energy efficiency category A
work equipment	electronic ballast Energy efficiency index (EEI): A2
connected load	220-240V; 50/60Hz
light distribution	direct
glare-free	without
system of protection	IP 67
class of protection	I
luminaire body	
material	borosilicate glass
weight (net)	approx. 5.8 kg
mains lead	connecting terminal
fastening	lamp bracket (accessory)
total length	A=1744 mm
light output	D=1048 mm
outside diameter	70 mm
side part	C with screwed cable gland

illuminance

measuring conditions: d=100cm

Emin: 409 lx
Em: 923 lx
Emax: 1427 lx

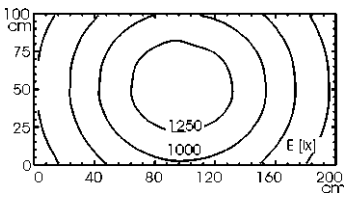

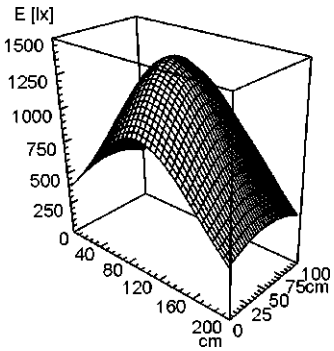

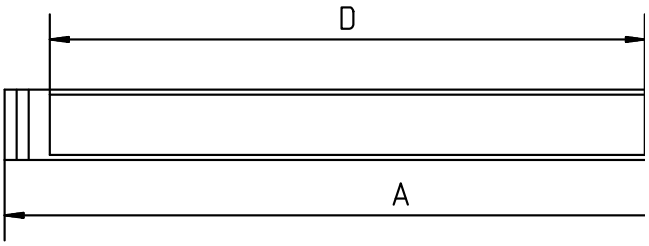

Errors and technical changes excepted. Images can vary from original.

www.waldmann.com

© 10.2012 H. Waldmann GmbH & Co. KG

halogen machine luminaire #112187013-00005236

Waldmann
ENGINEER OF LIGHT.

HSWK 75

145,00 €

voltage	24 V; AC/DC
lamping	1 x halogen lamp QT12 75 W
workequipment	without
cord	direct power supply
luminaire body material	sectional aluminium
weight (net)	approx. 1,6 kg (3.5 lbs)
mounting	screw-down flange~table clamp (accessory)~wall bracket (accessory)
technology	switchable
usage	switch
lamp cover	glass screen
glare-free	metal louv er
protection rating	IP 65
class of protection	III
color luminaire body	black
color of tubular sections	light grey

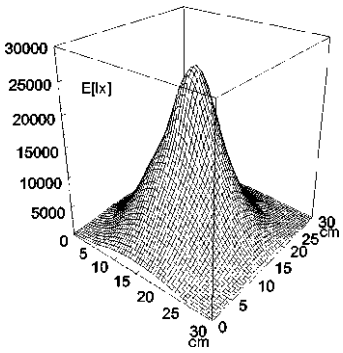

Emin:	263	lx
Em:	4964	lx
Emax:	26680	lx

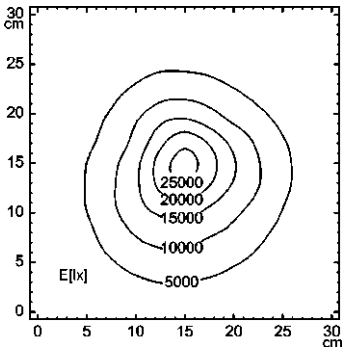

measuring conditions: 50

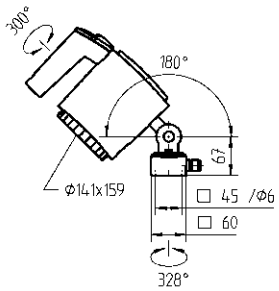

technical details are subject to alterations. © 09.2008 H. Waldmann GmbH & Co. KG

Tube luminaire

RL40- 154 S 112191021-00049080

Waldmann
ENGINEER OF LIGHT.

70,00 €

fitted with	1 x regular fluorescent lamp T16 54W/840 G5 light colour neutral white Energy efficiency category A
work equipment	connection to a separate electronic ballast
connected load	depends on the ballast
power consumption	approx. 54 W
light distribution	direct
system of protection	IP 67
class of protection	I
luminaire body	borosilicate glass,
weight (net)	approx. 1.0 kg
mains supply	connector 4-polig
fastening	lamp bracket (accessory)
dimension	A=1270 mm
light output	D=1141 mm
outside diameter	40 mm
side part	D with screwed cable gland

4-polig

illuminance

Comment: d=100cm

Em: 533 lx
Emax: 654 lx
Emin: 388 lx

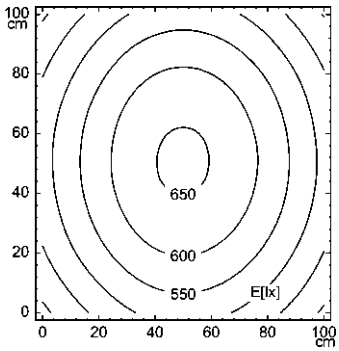

luminous intensity

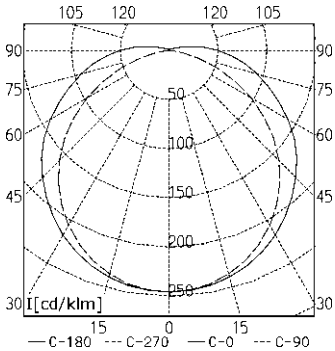

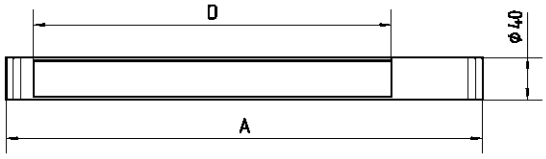

© 10.2015 H. Waldmann GmbH & Co. KG

Machine Tube Luminaire

RL40E- 124 112231020-00049149

Waldmann
ENGINEER OF LIGHT.

142,00 €

fitted with	1 x regular fluorescent lamp T16 24W/840 G5 light colour neutral white, 4000 K, Color Rendering Index (CRI)=85 Energy efficiency category A
work equipment	electronic ballast Energy efficiency index (EEI): A2
connected load	230-240 V; 50-60 Hz
power consumption	approx. 24 W
light distribution	direct
glare-free	without
system of protection	IP 67
class of protection	I
luminaire body	acrylic (PMMA), clear,
weight (net)	approx. 0.8 kg
mains supply	direct power supply
fastening	lamp bracket (accessory)
dimension	A=1003 mm
light output	D=549 mm
outside diameter	40 mm
side part	D with screwed cable gland

illuminance

measuring conditions: d=100cm

Em: 285 lx
Emax: 364 lx
Emin: 194 lx

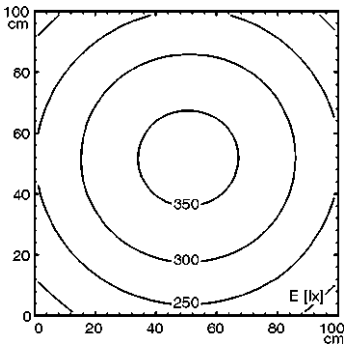

luminous intensity

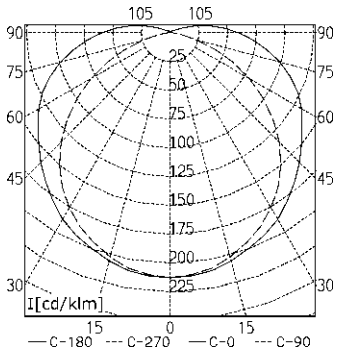

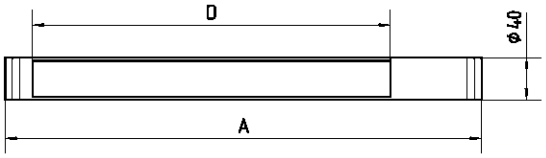

© 10.2014 H. Waldmann GmbH & Co. KG

Gelenkkopfleuchte ABLL 1

112353000-00041201

Waldmann
ENGINEER OF LIGHT.

Bestückung	LED Energieeffizienzklasse A+
Betriebsgerät	ohne
Anschlusswerte	abhängig vom Betriebsgerät
Leistungsaufnahme	ca. 3 W
Lichtverteilung	direkt, engstrahlend
Lichtfarbe	tageslichtweiß, ca. 5600 K
Farbwiedergabe (Ra)	> 75
Schutzart	IP 67
Schutzklasse	III
Bedienung	extern
Leuchtengehäuse	Aluminium, eloxiert, tiefschwarz
Lampenabdeckung	Glasblende
Gewicht (netto)	ca. 0.3 kg
Netzanschlussleitung	ca. 1.5 m; mit freien Litzen-/Leitungsenden
Befestigung	Gewindebohrung 1;5xM18
Besonderheiten	Schwenkbar über Kugelgelenk, Spot mit 6°-Abstrahlwinkel

45,00 €

CE

Beleuchtungsstärken

Kommentar: 700mA
Messabstand: 50 cm

Em: 1219 lx
Emax: 8966 lx
Emin: 69 lx

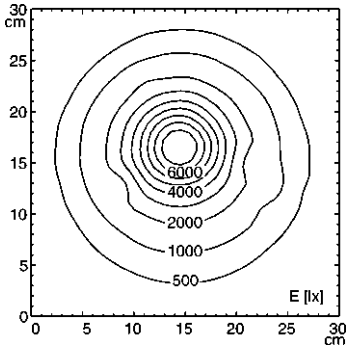

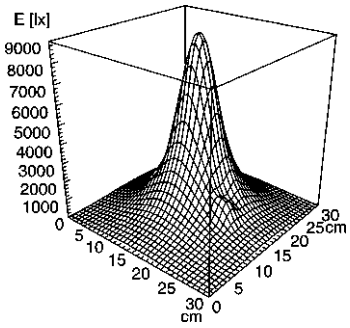

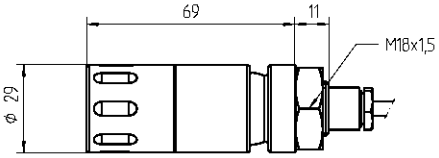

© 04.2017 H. Waldmann GmbH & Co. KG

Tube luminaire

RL70E- 158 H 112413002-00080964

Waldmann
ENGINEER OF LIGHT.

220,00 €

fitted with	1 x regular fluorescent lamp T26 58W/640 G13 light colour neutral white, 4000 K, color rendering index (CRI)=63
work equipment	electronic ballast Energy efficiency index (EEI): A2
connected load	220-240V; 50/60Hz
power consumption	approx. 54 W
light distribution	direct
glare-free	without
system of protection	IP 67
class of protection	I
luminaire body	acrylic (PMMA), clear,
weight (net)	approx. 3.0 kg
mains supply	connection box 160 BU/3
fastening	lamp bracket (accessory)
dimension	A=1664 mm
light output	D=1536 mm
outside diameter	70 mm
side part	A with screwed cable gland

160 BU/3

illuminance

Comment: d=100cm

Em: 398 lx
Emax: 556 lx
Emin: 214 lx

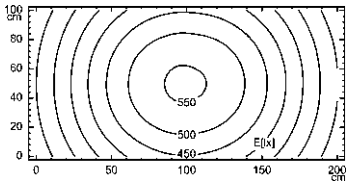

luminous intensity

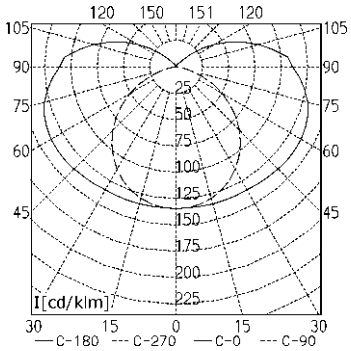

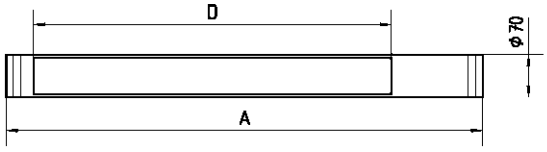

© 08.2015 H. Waldmann GmbH & Co. KG

light strip

SLIM LED - LIQ 12 112544001-00011081

Waldmann
ENGINEER OF LIGHT.

fitted with	12 x Light-emitting diode light colour daylight white, 5300-6400 K Energy efficiency category A+
work equipment	without
connected load	22-29 V; DC
power consumption	approx. 8 W
glare-free	without
system of protection	IP 67
class of protection	III
usage	without switch
luminaire body	aluminium/plastic, anodised, aluminium coloured anodised
lamp cover	acrylic clear
weight (net)	approx. 0.4 kg
mains lead	approx. 3.0 m; with free stranded wires
fastening	screws
dimension	A=336mm, C=290mm
special features	direction of beam +/- 45° adjustable

80,00 €

illuminance

measuring conditions: d=50cm

Em: 184 lx
Emax: 401 lx
Emin: 58 lx

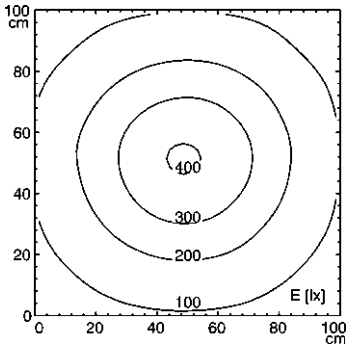

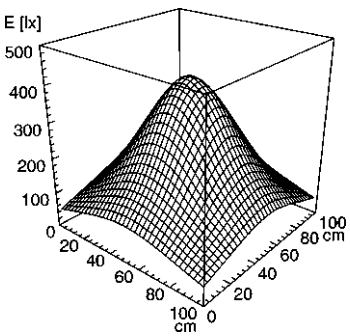

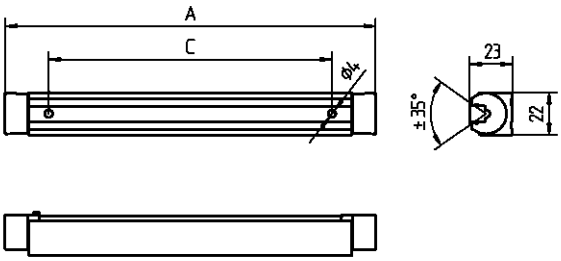

Errors and technical changes excepted. Images can vary from original.
Photometric and electrical data may vary due to component tolerances.

www.waldmann.com

© 10.2014 H. Waldmann GmbH & Co. KG

light strip

SLIM LED - LIQ 6 112544010-00011101

Waldmann
ENGINEER OF LIGHT.

40,00 €

fitted with	6 x Light-emitting diode light colour daylight white, 5300-6400 K, Color Rend Index (CRI)=
work equipment	without
connected load	22-29 V; DC
power consumption	approx. 4 W
glare-free	without
system of protection	IP 67
class of protection	III
usage	without switch
luminaire body	
material	aluminium/plastic
surface	anodised
colour	aluminium coloured anodised
lamp cover	potting, clear
mains lead	approx. 3.0 m; with free stranded wires
fastening	screws
dimension	A=196mm
special features	direction of beam +/- 45° adjustable

illuminance

measuring conditions: d=50cm

Emin: 32 lx
Em: 98 lx
Emax: 212 lx

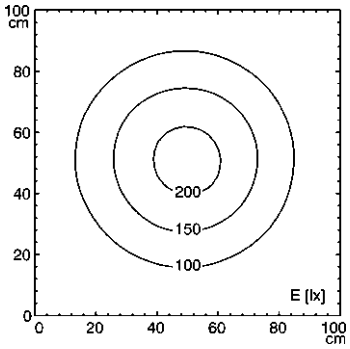

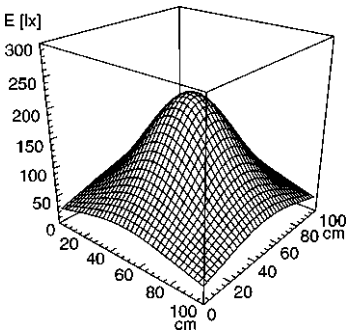

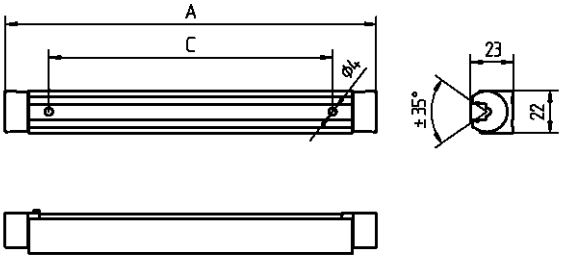

Errors and technical changes excepted. Images can vary from original.
Photometric and electrical data may vary due to component tolerances.

www.waldmann.com

© 12.2012 H. Waldmann GmbH & Co. KG

light strip

SLIM LED - LIQ 12

60,00 €

FITTED WITH	12 x Light-emitting diode ,3 W
WORK EQUIPMENT	without
CONNECTED LOAD	22-29 V, DC
POWER CONSUMPTION	approx. 8 W
SYSTEM OF PROTECTION	IP 67
CLASS OF PROTECTION	III
USAGE	without switch
LUMINAIRE BODY	
MATERIAL	aluminium/plastic
SURFACE	anodised
COLOUR LUMINAIRE BODY	aluminium coloured anodised
LAMP COVER	potting, clear
WEIGHT (NET)	approx. 0.4 kg
MAINS LEAD	approx. 3.0 m, with free stranded wires
DESIGN	mounted version
FASTENING	screws
TOTAL LENGTH	336 mm
SPECIAL FEATURES	direction of beam +/- 45° adjustable
ARTICLE NO.	112544011-00011102

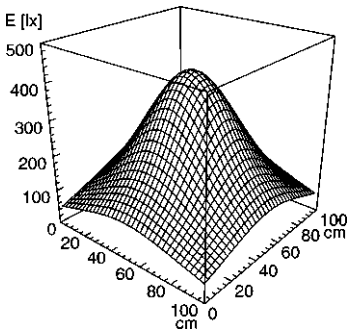

Emin: 59 lx
Em: 191 lx
Emax: 411 lx

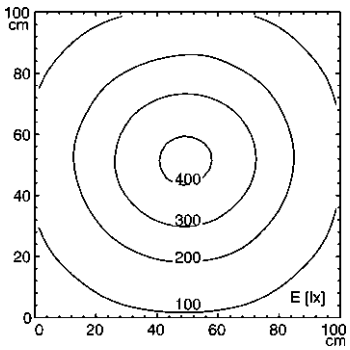

measuring conditions: d=50cm

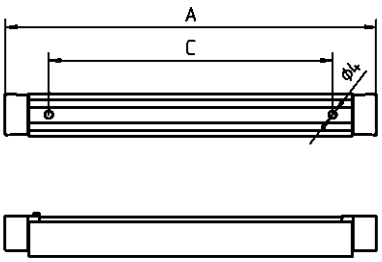

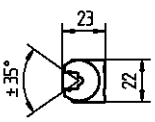

© 06.2011 H. Waldmann GmbH & Co. KG

Surface-mounted luminaire

SLIM LED - LIQ 24 112545012-00011132

Waldmann
ENGINEER OF LIGHT.

fitted with	24 x Light-emitting diode light colour daylight white, 5300-6400 K Energy efficiency category A+
work equipment	without
connected load	22-29 V; DC
power consumption	approx. 15 W
glare-free	without
system of protection	IP 67
class of protection	III
usage	external
luminaire body	aluminium/plastic, anodised, aluminium coloured anodised
lamp cover	potting, clear
weight (net)	approx. 0.4 kg
mains lead	approx. 3.0 m; with free stranded wires
fastening	screws
dimension	A=616mm, C=600mm

75,00 €

illuminance

Comment: d=50cm

Em: 377 lx
Emax: 726 lx
Emin: 135 lx

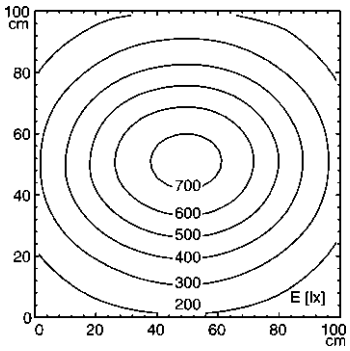

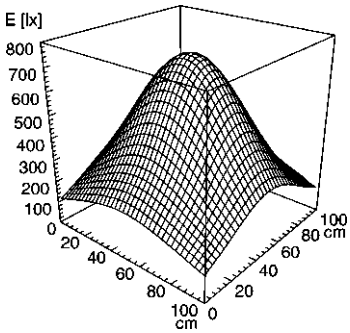

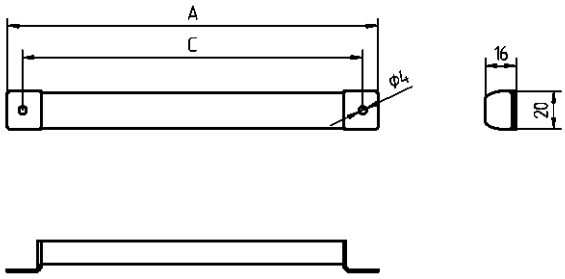

© 03.2015 H. Waldmann GmbH & Co. KG

PINAR MÜHENDİSLİK SAN.TİC.LTD.ŞTİ

Waldmann
ENGINEER OF LIGHT.

NO	Ürün Kodu	Açıklaması	Adet	Satış Fiyatımız
1	WD-112187013-00005236	HSWK 75	1	€ 145,00
2	WD-112571005	MUEL 2S	1	€ 88,00
3	WD-112353000	ABLL 1x3 W	1	€ 45,00
4	WD-112567010	MTAL 2S	1	€ 60,00
5	WD-112544010	SLIM LED LIQ 6	1	€ 40,00
6	WD-611063011	RL70CV-136 H 1x36W	1	€ 130,00
7	WD-112180001	RL70E-254 Borosilicate 220-240V AC	1	€ 160,00
8	WO-112191021	RL40 -154S borosilikate	1	€ 70,00
9	WO-112567036	MACH LED 4LÜ	1	€ 160,00
10	WD-113094000-00596722	LUMATRIS MSAL 24 S 10W	1	€ 145,00
11	WD-112544001	SLIM LED LIQ 12 24V DC IP67 adjustable	1	€ 80,00
12	WD-112231020 00049149	RL40E- 124 TUBE	1	€ 142,00
13	WD-112413002-00080964	RL70E-158 H/A/ACRYL	1	€ 220,00
14	WD-112544011-00011102	SLIM LED LIQ 12	1	€ 60,00
15	WD-112567000-00570117	MACH LED MASCHINE LUMIN. MTAL 1 S,	1	€ 60,00
16	WD-112571026-00082511	MACH LED PRO - MUAL 2S - mounted	1	€ 150,00
17	WD-112571004-00085220	MACH LED PRO 24V DC 5000K	1	€ 60,00
18	WD-101641000	HL 109	1	€ 50,00
19	WD-112567005	MTAL 1S 1x6W 24 V AC 182 mm Reflektör	1	€ 95,00
20	WD-112567015	MTAL 2S 2x6 Watt 357 mm	1	€ 140,25
21	WO-112545012	SLİM LED 15W	1	€ 75,00

Ürünlerimiz hakkında ayrıntılı bilgi almak için 0212 220 02 77 numaralı telefondan ya da www.waldmann.com.tr adresinden bizlere ulaşabilirsiniz. Teklif isteminde bulunmak için gamze.tastekin@pinarmuhendislik.com.tr adresinden mail yolu ile ulaşabilirsiniz. Kampanyalı fiyatlarımız 15.12.2018 tarihine kadar geçerlidir. Satış birim fiyatında belirtilen fiyatlar KDV hariç olarak hesaplanmıştır. Ürün satın alınırken artı KDV uygulanmaktadır.